Delay timer (LS7212) in Verilog HDL

Today's project is an implementation of a programmable digital delay timer in Verilog HDL. Verilog code for the delay timer is fully presented.

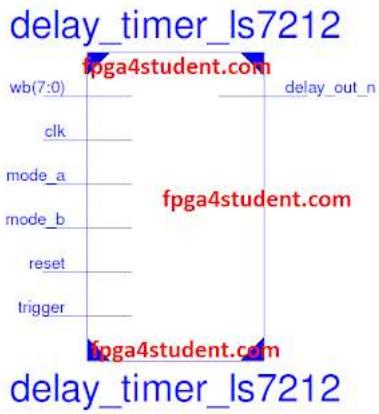

The digital delay timer being implemented is CMOS IC LS7212 which is to generate programmable delays. The specification of the delay timer can be easily found here. Basically, the delay timer has 4 operating modes: one-shot (OS), Delayed Operate (DO), Delayed Release(DR), Dual Delay (DD). Those four modes will be selected by inputs mode_a and mode_b.

mode_a	mode_b	Mode
0	0	One-Shot
0	1	Delayed Operate
1	0	Delayed Release
1	1	Dual Delay

The wb[7:0] input is to program the delays according to given equations in the specification of the delay timer. To understand more how it works in each mode and how inputs control delays, kindly refer to its datasheet. The following waveform is how the delays are generated in each mode.

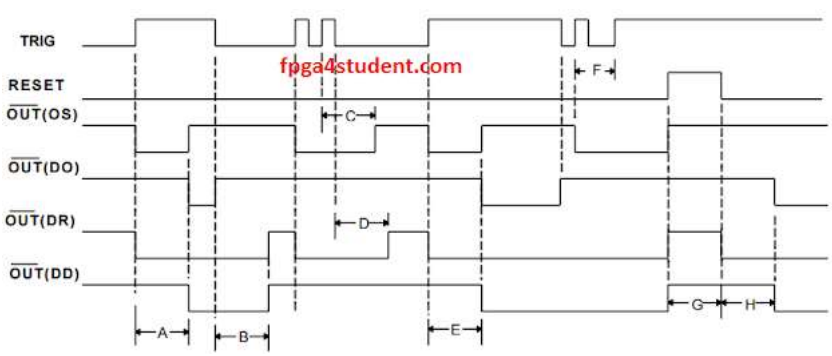

Below is the Verilog code for the programmable digital delay timer LS7212.

```
//fpga4student.com: FPga projects, Verilog projects, VHDL projects
// Verilog project: Verilog code for delay timer LS7212
module delay_timer_ls7212
(
```

```
      input [7:0] wb, // weighting bits
      input clk, // clock input
      input reset, // timer reset
      input trigger, // trigger input
      input mode_a, mode_b, // mode bits A and B
      output reg delay_out_n // delay output, active low
 );
 reg[7:0] PULSE_WIDTH ;
 reg [7:0] DELAY;
 reg [7:0] TIMER=0;
 reg trigger_sync_1=0,trigger_sync_2=0;
 wire trigger_rising,trigger_falling;
 reg timer_start=0,out_low=0;
 wire timer_clear2,timer_clear3,timer_clear;
 reg [1:0] mode;
 reg reset_timer1=0,reset_timer2=0,reset_timer=0;
 wire reset_timer3,reset_det;
 reg reset_det1=0,reset_det2=0;
//fpga4student.com: FPga projects, Verilog projects, VHDL projects
 always @(posedge clk)
 begin
          trigger_sync_1 <= trigger; // the first Flip-Flop
          trigger_sync_2 <= trigger_sync_1;// the second Flip-Flop
          reset_timer1 <= reset_timer;
          reset_timer2 <= reset_timer1;
          reset_det1 <= reset;
          reset_det2 <= reset_det1;
 end
 // Identify the zero to one transitions on trigger signal
 assign trigger_rising = trigger_sync_1 & (~trigger_sync_2);
 assign trigger_falling = trigger_sync_2 & (~trigger_sync_1);
 assign reset_timer3 = reset_timer1 & (~reset_timer2);
 assign reset_det = reset_det2 & (~reset_det1);
 // sample Mode and wb
 always @(trigger_rising,trigger_falling,mode_a,mode_b,wb)
 begin
      if(trigger_falling == 1 || trigger_rising == 1) begin
           PULSE_WIDTH = wb;
           DELAY = (2*wb + 1)/2;
           mode = {mode_a,mode_b};
      end
 end
 // modes
 always @(mode,reset,trigger_falling,trigger_rising,TIMER,reset,trigger,PULSE_WIDT
 begin
      case(mode)
                2'b00: // One-Shot Mode
                          begin
                               if(reset) begin
                                    out_low <= 0;
                                    timer_start <= 0;
                                    reset_timer <= 1;
                               end
                               else if(trigger_rising==1) begin
                                    out_low <= 1;
                                    timer_start <= 1;
                                    reset_timer <= 1;
                                    end
                               else if(TIMER>=PULSE_WIDTH) begin
                                    out_low <= 0;
                                    timer_start <= 0;
                                    reset_timer <= 1;
                               end
```

```
                end
        2'b01: // Delayed Operate Mode
                begin
                    if(reset) begin
                        out_low <= 0;
                        timer_start <= 0;
                        reset_timer <= 1;
                    end
                    else if(reset_det==1 && trigger==1) begin
                        timer_start <= 1;
                        reset_timer <= 0;
                    end
                    else if(trigger_rising==1) begin
                        timer_start <= 1;
                        reset_timer <= 0;
                        end
                    else if(trigger_falling==1 || trigger == 0) begin
                        out_low <= 0;
                        reset_timer <= 1;
                        timer_start <= 0;
                    end
                    else if(TIMER >= DELAY) begin
                        out_low <= 1;
                        timer_start <= 0;
                        reset_timer <= 1;
                    end
                    //else
                    //     reset_timer <= 0;
                end
        2'b10: // Delayed Release Mode
                begin
                    if(reset) begin
                        out_low <= 0;
                        timer_start <= 0;
                        reset_timer <= 1;
                    end
                    else if(trigger_rising==1 || trigger == 1) begin
                        out_low <= 1;
                    end
                    else if(trigger_falling==1 ) begin
                        timer_start <= 1;
                        reset_timer <= 0;
                        end
                    else if(TIMER>=DELAY) begin
                        out_low <= 0;
                        timer_start <= 0;
                        reset_timer <= 1;
                    end
                end
        2'b11: // Delayed Dual Mode
                begin
                    if(reset) begin
                        out_low <= 0;
                        timer_start <= 0;
                        reset_timer <= 1;
                    end
                    else if(reset_det==1 && trigger==1) begin
                        timer_start <= 1;
                        reset_timer <= 0;
                    end
                    else if(trigger_falling==1 || trigger_rising==1 ) b
                        timer_start <= 1;
                        reset_timer <= 0;
```

```
                                        end
                                   else if(TIMER>=DELAY) begin
                                        out_low <= trigger;
                                        timer_start <= 0;
                                        reset_timer <= 1;
                                   end
                              end
            endcase
 end
//fpga4student.com: FPga projects, Verilog projects, VHDL projects
 // timer
 always @(posedge clk or posedge timer_clear)
 begin
 if(timer_clear)
      TIMER <= 0;
 else if(timer_start)
      TIMER <= TIMER + 1;
 end
 assign timer_clear = reset_timer3 | trigger_rising == 1 | timer_clear3 ;
 assign timer_clear2 = (trigger_rising == 1)|(trigger_falling == 1);
 assign timer_clear3 = timer_clear2 & (mode == 2'b11);
 //delay output
 always @(posedge clk)
 begin
      if(out_low == 1)
           delay_out_n <= 0;
      else
           delay_out_n <= 1;
 end
 endmodule
```

Testbench Verilog code for the delay timer:

```
`timescale 1ns / 1ps
//fpga4student.com: FPga projects, Verilog projects, VHDL projects
// Testbench Verilog code for delay timer
 module tb_ls7212;
      // Inputs
      reg [7:0] wb;
      reg clk;
      reg reset;
      reg trigger;
      reg mode_a;
      reg mode_b;
      // Outputs
      wire delay_out_n;
      //fpga4student.com: FPga projects, Verilog projects, VHDL projects
      // Instantiate the Unit Under Test (UUT)
      delay_timer_ls7212 uut (
           .wb(wb),
           .clk(clk),
           .reset(reset),
           .trigger(trigger),
           .mode_a(mode_a),
           .mode_b(mode_b),
           .delay_out_n(delay_out_n)
      );
      initial begin
           // Initialize Inputs
           wb = 10;
           mode_a = 0;
           mode_b = 0;
           reset = 0;
           trigger = 0;
```

```
            #500;
            trigger = 1;
            #15000;
            trigger = 0;
            #15000;
     trigger = 1;
            #2000;
            trigger = 0;
            #2000;
            trigger = 1;
            #2000;
            trigger = 0;
            #20000;
            trigger = 1;
            #30000;
            trigger = 0;
            #2000;
            trigger = 1;
            #2000;
            trigger = 0;
            #4000;
            trigger = 1;
            #10000;
            reset = 1;
            #10000;
            reset = 0;
            // Delay Operate
            // Add stimulus here
       end
    initial begin
    clk = 0;
    forever #500 clk = ~clk;
       end
 endmodule
//fpga4student.com: FPga projects, Verilog projects, VHDL projects
```

Simulation waveform for the digital delay timer in Verilog

One-Shot Mode

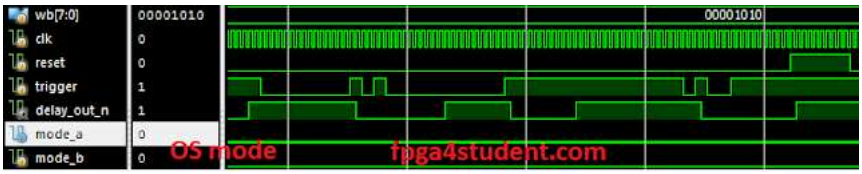

Delayed Operate Mode

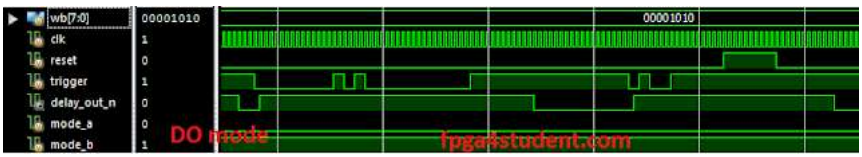

Delayed Release Mode

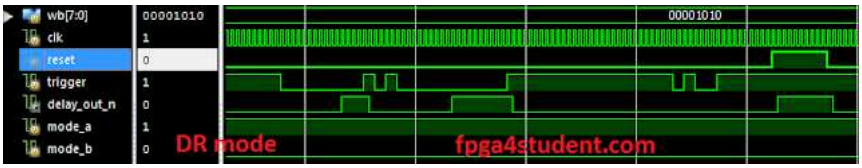

Delay Dual Mode

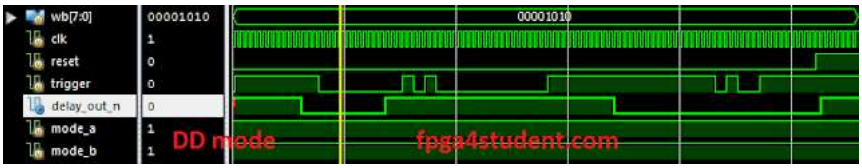

The Verilog code for the programmable delay timer is synthesizable and can be implemented on FPGAs.

Recommended Verilog projects:

1. **What is an FPGA? How Verilog works on FPGA**
2. Verilog code for FIFO memory
3. Verilog code for 16-bit single-cycle MIPS processor
4. Programmable Digital Delay Timer in Verilog HDL
5. Verilog code for basic logic components in digital circuits
6. Verilog code for 32-bit Unsigned Divider
7. Verilog code for Fixed-Point Matrix Multiplication
8. Plate License Recognition in Verilog HDL
9. Verilog code for Carry-Look-Ahead Multiplier
10. Verilog code for a Microcontroller
11. Verilog code for 4x4 Multiplier
12. Verilog code for Car Parking System
13. Image processing on FPGA using Verilog HDL
14. How to load a text file into FPGA using Verilog HDL
15. Verilog code for Traffic Light Controller
16. Verilog code for Alarm Clock on FPGA
17. Verilog code for comparator design
18. Verilog code for D Flip Flop
19. Verilog code for Full Adder
20. Verilog code for counter with testbench
21. Verilog code for 16-bit RISC Processor
22. Verilog code for button debouncing on FPGA
23. How to write Verilog Testbench for bidirectional/ inout ports
24. Tic Tac Toe Game in Verilog and LogiSim
25. 32-bit 5-stage Pipelined MIPS Processor in Verilog (Part-1)
26. 32-bit 5-stage Pipelined MIPS Processor in Verilog (Part-2)
27. 32-bit 5-stage Pipelined MIPS Processor in Verilog (Part-3)
28. Verilog code for Decoder
29. Verilog code for Multiplexers
30. N-bit Adder Design in Verilog
31. Verilog vs VHDL: Explain by Examples
32. Verilog code for Clock divider on FPGA
33. **How to generate a clock enable signal in Verilog**
34. **Verilog code for PWM Generator**
35. **Verilog coding vs Software Programming**
36. **Verilog code for Sequence Detector using Moore FSM**

DMCA PROTECTED

Privacy Policy | Disclaimer | Sitemap | Contact | Advertise Here
Copyright © 2016-2020 FPGA4student.com All Rights Reserved.